HIT 1-160A

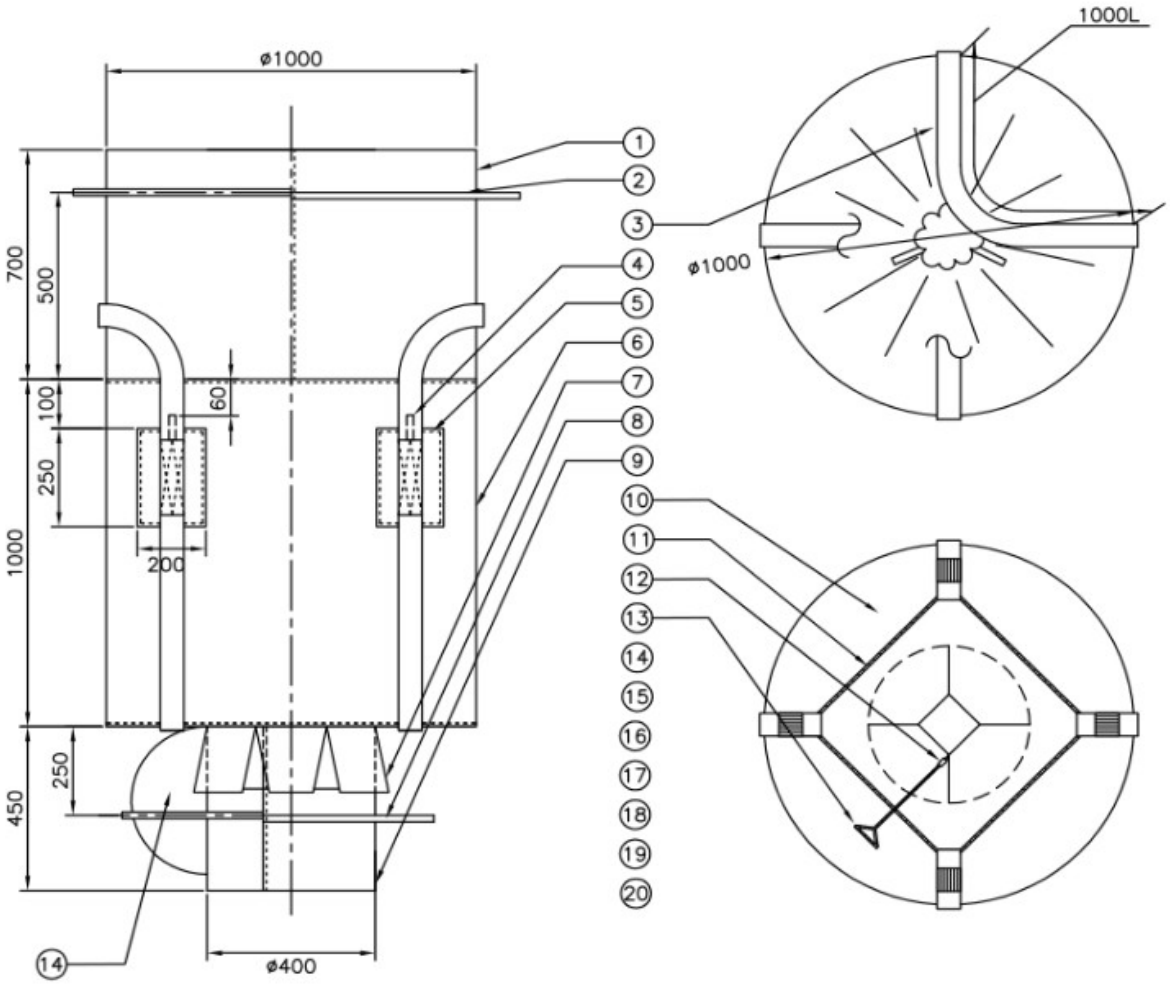

INQUIRY NO. HIT 1-160A	DATE APRIL / 18 / 2016
HOKA INTERNATIONAL TRADING CO.,LTD.	
TAICON : OF – –	
PE LINER: × ×	FLAT SEAL or NO SEAL
APPROVED	DRAWN PENG

NO.	PARTS NAME	QNT	MATERIAL / SPEC.
1	CHARGE SPOUT	1	PP 1000d 10×10 LAM
2	SPOUT BINDING TAPE	1	PP 1×20 1500L
3	SLING BELT	2	PP 70W (2.1MT) BLUE
4	HOOK	4	PP 1×20
5	REINFORCEMENT	4	PP 1500d 15×15 LAM
6	MAINBODY	1	PP 1500d 15×15
7	LOWER COVER HOLDER	1	PP 1500d 15×15
8	SPOUT BINDING TAPE	1	PP 1×20 1000L
9	DISCHARGE SPOUT	1	PP 1000d 10×10 LAM
10	LOWER BODY	1	PP 1500d 15×15
11	REINFORECEMENT ROPE	1	PP 6ø
12	SLIDE TUBE	1	PVC HOSE ø13.5
13	COVER HOLDING ROPE	1	PP 6ø
14	LOWER FLAP ø300	1	PP 1500d 15×15 LAM
15			
16			
17			
18			
19			
20			
21			

SPECIAL INSTRUCTIONS